* 0000800000001 *

Cambridge Assessment International Education

Cambridge International AS & A Level

CANDIDATE NAME

CENTRE NUMBER

CANDIDATE NUMBER

3969211282

PHYSICS **9702/22**

Paper 2 AS Level Structured Questions **February/March 2025**

1 hour 15 minutes

You must answer on the question paper.

No additional materials are needed.

INSTRUCTIONS

- Answer **all** questions.
- Use a black or dark blue pen. You may use an HB pencil for any diagrams or graphs.
- Write your name, centre number and candidate number in the boxes at the top of the page.
- Write your answer to each question in the space provided.
- Do **not** use an erasable pen or correction fluid.
- Do **not** write on any bar codes.
- You may use a calculator.
- You should show all your working and use appropriate units.

INFORMATION

- The total mark for this paper is 60.
- The number of marks for each question or part question is shown in brackets [ ].

This document has **16** pages.

© UCLES 2025

[Turn over

Data

acceleration of free fall	g	=	$9.81\ \text{m s}^{-2}$
speed of light in free space	c	=	$3.00 \times 10^{8}\ \text{m s}^{-1}$
elementary charge	e	=	$1.60 \times 10^{-19}\ \text{C}$
unified atomic mass unit	1 u	=	$1.66 \times 10^{-27}\ \text{kg}$
rest mass of proton	m_p	=	$1.67 \times 10^{-27}\ \text{kg}$
rest mass of electron	m_e	=	$9.11 \times 10^{-31}\ \text{kg}$
Avogadro constant	N_A	=	$6.02 \times 10^{23}\ \text{mol}^{-1}$
molar gas constant	R	=	$8.31\ \text{J K}^{-1}\ \text{mol}^{-1}$
Boltzmann constant	k	=	$1.38 \times 10^{-23}\ \text{J K}^{-1}$
gravitational constant	G	=	$6.67 \times 10^{-11}\ \text{N m}^2\ \text{kg}^{-2}$
permittivity of free space	ε_0	=	$8.85 \times 10^{-12}\ \text{F m}^{-1}$
	$\left(\frac{1}{4\pi\varepsilon_0}\right.$	=	$\left.8.99 \times 10^{9}\ \text{m F}^{-1}\right)$
Planck constant	h	=	$6.63 \times 10^{-34}\ \text{J s}$
Stefan–Boltzmann constant	σ	=	$5.67 \times 10^{-8}\ \text{W m}^{-2}\ \text{K}^{-4}$

Formulae

uniformly accelerated motion	s	=	$ut + \frac{1}{2}at^2$
	v^2	=	$u^2 + 2as$
hydrostatic pressure	Δp	=	$\rho g \Delta h$
upthrust	F	=	$\rho g V$
Doppler effect for sound waves	f_o	=	$\frac{f_\text{s} v}{v \pm v_\text{s}}$
electric current	I	=	$Anvq$
resistors in series	R	=	$R_1 + R_2 + \ldots$
resistors in parallel	$\frac{1}{R}$	=	$\frac{1}{R_1} + \frac{1}{R_2} + \ldots$

DO NOT WRITE IN THIS MARGIN
DO NOT WRITE IN THIS MARGIN
DO NOT WRITE IN THIS MARGIN
DO NOT WRITE IN THIS MARGIN
DO NOT WRITE IN THIS MARGIN

DO NOT WRITE IN THIS MARGIN
DO NOT WRITE IN THIS MARGIN
DO NOT WRITE IN THIS MARGIN
DO NOT WRITE IN THIS MARGIN
DO NOT WRITE IN THIS MARGIN

1 **(a)** Explain what is meant by the accuracy of a measured value.

.....

..... [1]

(b) Two solid cubes, A and B, are measured to determine the density of their materials.

Table 1.1 shows the measurements for cube A.

Table 1.1

quantity	measurement
length of side	(1.53 ± 0.01) cm
mass	(31.3 ± 0.5) g

(i) Show that the calculated density of the material of cube A is 8.7×10^3 kg m^{-3}.

[2]

(ii) Calculate the percentage uncertainty in the density of the material of cube A.

percentage uncertainty = ...% [2]

(iii) The density of the material of cube B is determined to be 9.2×10^3 kg m^{-3} ± 6%.

State and explain whether cube A and cube B could be made from the same material.

.....

.....

.....

..... [2]

[Total: 7]

2 **(a)** State the principle of moments.

.....

.....

..... [2]

(b) A solid plastic cylinder floats in water. It is used to support one end of a horizontal uniform beam AB as shown in Fig. 2.1.

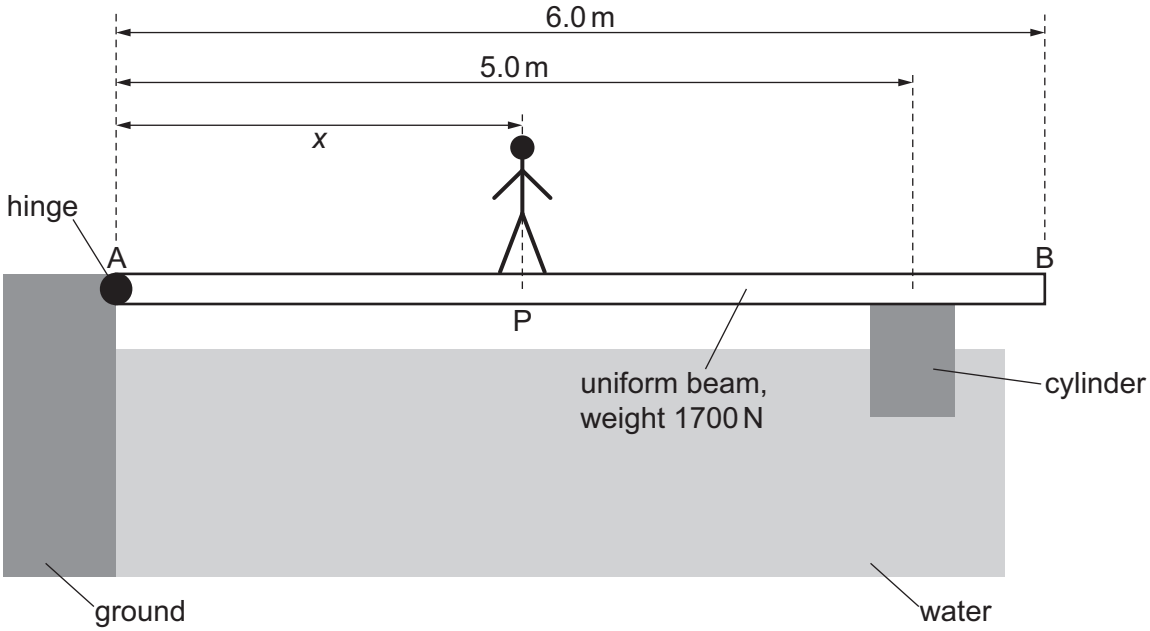

Fig. 2.1 (not to scale)

The beam has length 6.0 m and weight 1700 N. The beam is attached to solid ground with a hinge at end A.

The cylinder is floating vertically in the water. The top of the cylinder is attached at its centre to the beam at a horizontal distance of 5.0 m from end A. The cylinder applies a vertical force of 1300 N to the beam.

A person of weight 660 N stands on the beam at point P.

The beam AB is in equilibrium.

(i) By taking moments about end A, determine the distance *x* from A to P.

distance = ... m [3]

DO NOT WRITE IN THIS MARGIN

(ii) The bottom of the cylinder is submerged in the water to depth y as shown in Fig. 2.2. The beam is still attached to the cylinder but not shown.

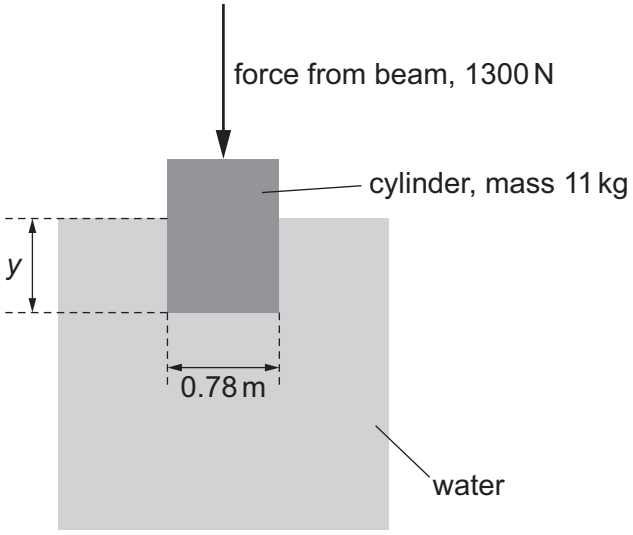

Fig. 2.2 (not to scale)

The cylinder has mass 11 kg and diameter 0.78 m. The beam exerts a vertical force of 1300 N on the cylinder. The cylinder is in equilibrium.

Show that the upthrust acting on the cylinder is 1400 N.

[1]

(iii) The water has density 990 kg m^{-3}.

Calculate the depth y.

y = ... m [2]

DO NOT WRITE IN THIS MARGIN
DO NOT WRITE IN THIS MARGIN
DO NOT WRITE IN THIS MARGIN
DO NOT WRITE IN THIS MARGIN
DO NOT WRITE IN THIS MARGIN

(iv) The person can stand anywhere between A and B.

On Fig. 2.3, sketch the variation of the depth of the bottom of the cylinder with the distance of the person from A, for distances between 0 and 6.0 m. Numerical values are not required.

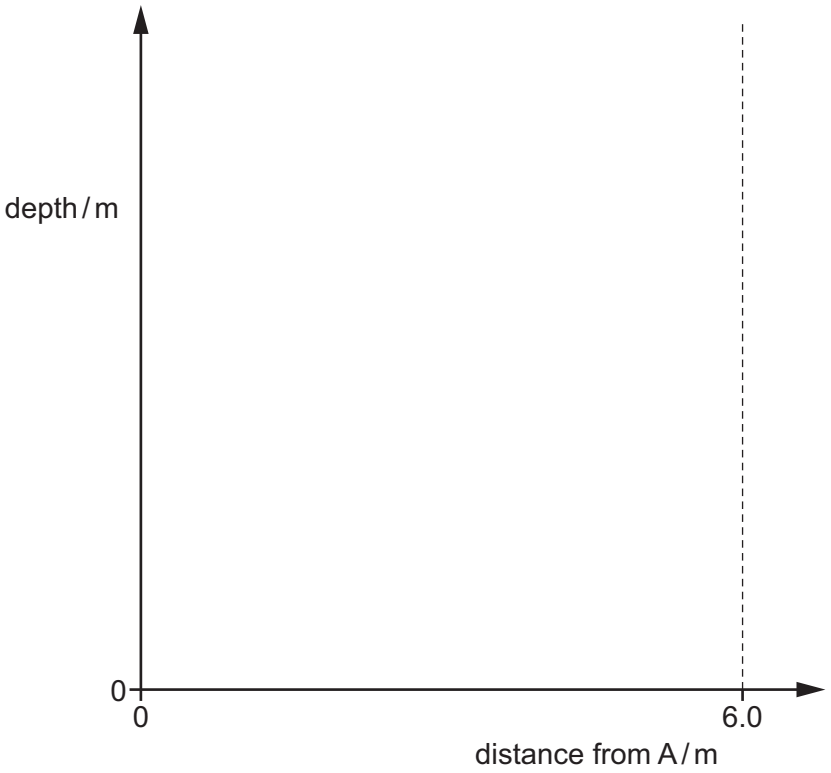

Fig. 2.3

[2]

[Total: 10]

DO NOT WRITE IN THIS MARGIN
DO NOT WRITE IN THIS MARGIN
DO NOT WRITE IN THIS MARGIN
DO NOT WRITE IN THIS MARGIN
DO NOT WRITE IN THIS MARGIN

3 **(a)** A truck R of mass 9400 kg moves with constant acceleration in a straight line down a slope, as illustrated in Fig. 3.1.

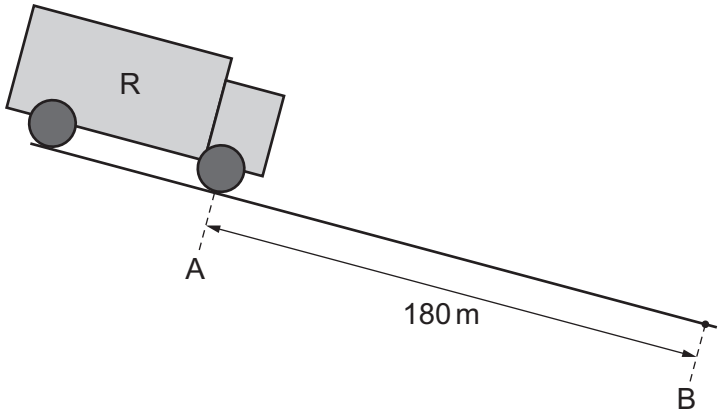

Fig. 3.1

At point A the speed of the truck is 13 m s^{-1} and at point B the speed of the truck is 22 m s^{-1}. A and B are a distance of 180 m apart.

(i) Calculate the acceleration of the truck between A and B.

acceleration = ... m s^{-2} [2]

(ii) Determine the gain in kinetic energy of the truck between A and B.

gain in kinetic energy = ... J [3]

DO NOT WRITE IN THIS MARGIN
DO NOT WRITE IN THIS MARGIN
DO NOT WRITE IN THIS MARGIN
DO NOT WRITE IN THIS MARGIN
DO NOT WRITE IN THIS MARGIN

(b) A short time after passing point B truck R moves in a straight line on horizontal ground. The driver of the truck applies the brakes. Fig. 3.2 shows the variation with time of the momentum of the truck.

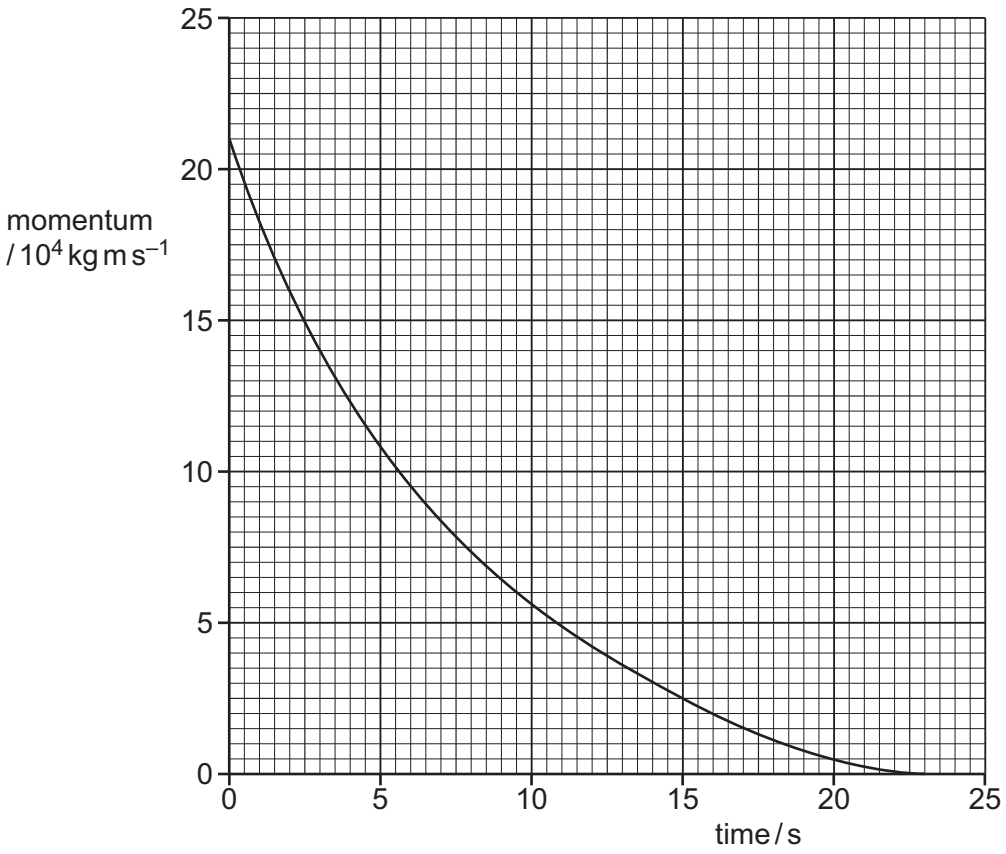

Fig. 3.2

(i) Define force.

.....

..... [1]

(ii) Show that the average resultant force F acting on truck R between time $t = 0$ and $t = 15\,s$ is $-1.2 \times 10^4\,N$.

[1]

DO NOT WRITE IN THIS MARGIN
DO NOT WRITE IN THIS MARGIN
DO NOT WRITE IN THIS MARGIN
DO NOT WRITE IN THIS MARGIN
DO NOT WRITE IN THIS MARGIN

(iii) An identical truck S has the same initial momentum as truck R. Truck S experiences a constant force equal to the force *F* in **(b)(ii)**.

State and explain whether truck S will take more, less or the same amount of time to come to rest as truck R.

.....

.....

.....

.....

.....

.....

..... [3]

[Total: 10]

DO NOT WRITE IN THIS MARGIN
DO NOT WRITE IN THIS MARGIN
DO NOT WRITE IN THIS MARGIN
DO NOT WRITE IN THIS MARGIN
DO NOT WRITE IN THIS MARGIN

4 A device containing a microwave emitter and receiver is placed in front of a large metal sheet in a vacuum as shown in Fig. 4.1.

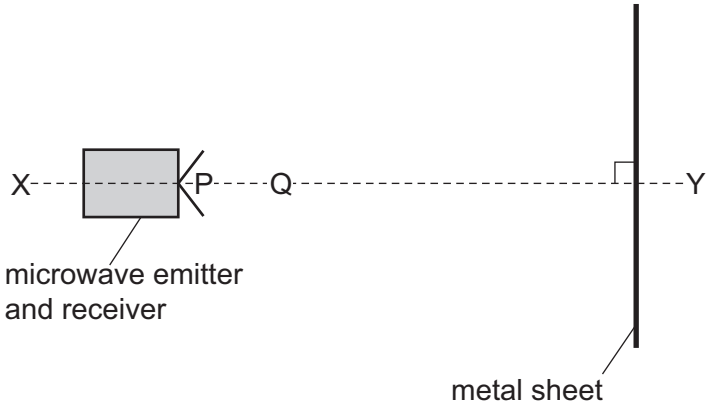

Fig. 4.1 (not to scale)

The line XY is perpendicular to the metal sheet. The device emits microwaves of frequency 6.3 GHz.

(a) When the device is at position P, a stationary wave is formed between the device and the sheet.

Explain how the stationary wave, including the nodes and the antinodes, is formed.

.....

.....

.....

.....

.....

.....

.....

.....

..... [4]

(b) **(i)** Calculate the wavelength of the microwaves.

wavelength = ... m [2]

DO NOT WRITE IN THIS MARGIN

(ii) At point P the receiver detects a maximum amplitude of the stationary wave.

The device is moved slowly from point P along the line XY and the receiver detects a series of minimum and maximum amplitudes. The first time a minimum amplitude is detected by the receiver is when the device is at point Q.

Determine the distance between P and Q.

distance = ... m [1]

(iii) The intensity of the microwaves emitted by the device is increased. The frequency of the microwaves is unchanged. The device is moved slowly along the line XY from point Q until the next maximum amplitude is detected at point R.

State and explain whether the distance QR is greater than, less than or the same as distance PQ.

.....

.....

..... [1]

[Total: 8]

DO NOT WRITE IN THIS MARGIN
DO NOT WRITE IN THIS MARGIN
DO NOT WRITE IN THIS MARGIN
DO NOT WRITE IN THIS MARGIN
DO NOT WRITE IN THIS MARGIN

5 A stationary loudspeaker emits sound of constant frequency. A microphone is placed near to the loudspeaker and connected to a cathode-ray oscilloscope (CRO). The trace on the screen of the CRO is shown in Fig. 5.1.

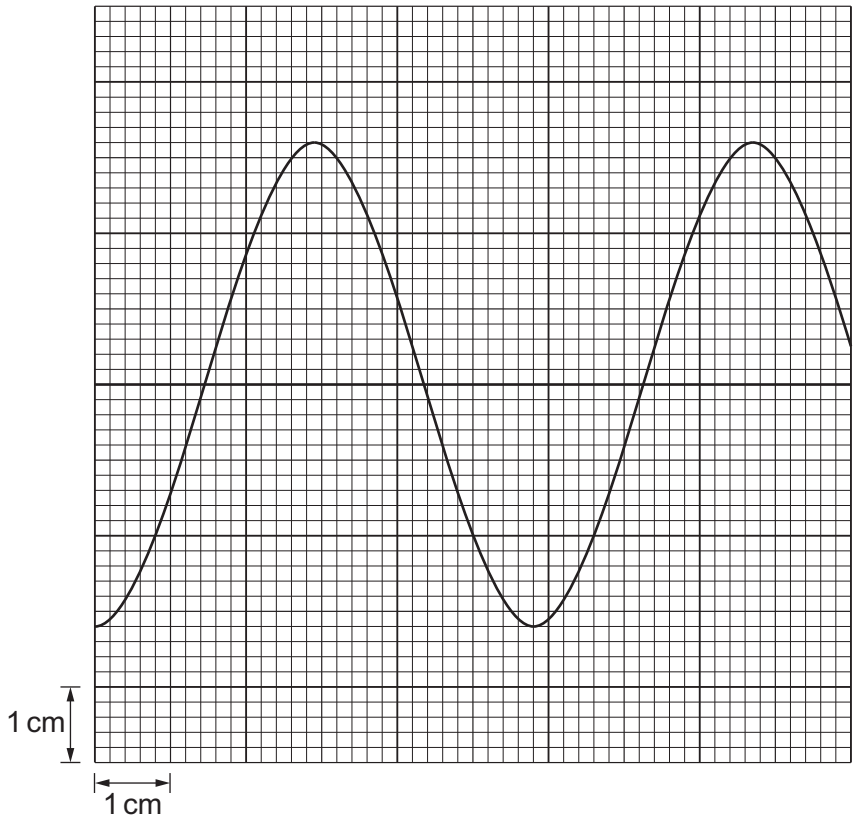

Fig. 5.1

The time-base of the CRO is set to $5.0 \times 10^{-4}\,\text{s}\,\text{cm}^{-1}$.

(a) The speed of the sound emitted by the loudspeaker is $330\,\text{m}\,\text{s}^{-1}$.

Determine the wavelength of the sound.

wavelength = ... m [3]

(b) The loudspeaker now moves in a straight line while emitting the same sound of constant frequency. The period of the trace on the CRO increases continuously.

Describe the motion of the loudspeaker.

.....

.....

..... [2]

[Total: 5]

© UCLES 2025

DO NOT WRITE IN THIS MARGIN
DO NOT WRITE IN THIS MARGIN
DO NOT WRITE IN THIS MARGIN
DO NOT WRITE IN THIS MARGIN
DO NOT WRITE IN THIS MARGIN

6 A cylindrical copper wire P of length 0.24 m is shown in Fig. 6.1.

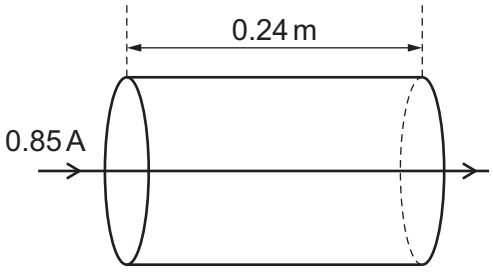

Fig. 6.1 (not to scale)

The current in the wire is 0.85 A.
The resistance of the wire is 3.3 mΩ.
The **total** number of charge carriers N in the wire is 2.6×10^{22}.
The resistivity of copper is $1.8 \times 10^{-8}\,\Omega\,\text{m}$.

(a) Calculate the potential difference between the two ends of the wire.

potential difference = ... V [2]

(b) (i) Show that the cross-sectional area of the wire is $1.3 \times 10^{-6}\,\text{m}^2$.

[2]

(ii) Show that the number density of charge carriers in the wire is $8.3 \times 10^{28}\,\text{m}^{-3}$.

[1]

(iii) Calculate the average drift speed of the charge carriers (electrons) in the wire.

average drift speed = ... m s^{-1} [2]

DO NOT WRITE IN THIS MARGIN
DO NOT WRITE IN THIS MARGIN
DO NOT WRITE IN THIS MARGIN
DO NOT WRITE IN THIS MARGIN
DO NOT WRITE IN THIS MARGIN

(c) A different copper wire Q has the same volume as wire P, but non-uniform radius, as shown in Fig. 6.2.

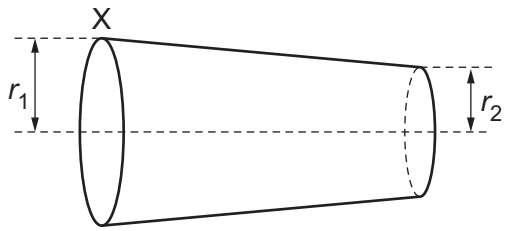

Fig. 6.2 (not to scale)

The radius r_1 at end X of wire Q is the same as the radius of wire P. Radius r_2 is less than r_1.

(i) State and explain how the resistance of wire Q compares with the resistance of wire P.

.....

.....

.....

.....

.....

.....

..... [4]

DO NOT WRITE IN THIS MARGIN
DO NOT WRITE IN THIS MARGIN
DO NOT WRITE IN THIS MARGIN
DO NOT WRITE IN THIS MARGIN
DO NOT WRITE IN THIS MARGIN

(ii) On Fig. 6.3, sketch a graph of the variation of the average drift speed of the charge carriers with distance from end X of wire Q.

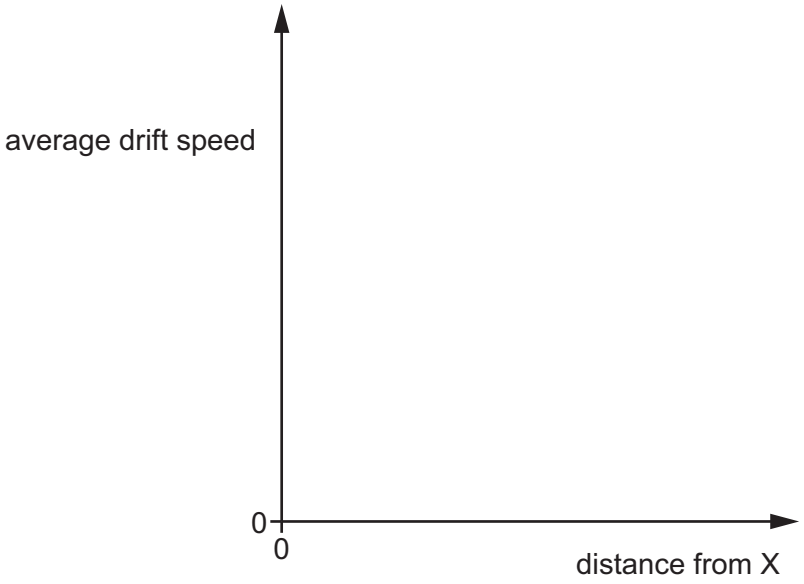

Fig. 6.3

[2]

[Total: 13]

DO NOT WRITE IN THIS MARGIN
DO NOT WRITE IN THIS MARGIN
DO NOT WRITE IN THIS MARGIN
DO NOT WRITE IN THIS MARGIN
DO NOT WRITE IN THIS MARGIN

7 An isolated stationary nucleus Q decays into nucleus R and an α-particle. The α-particle has speed $1.5 \times 10^7\,\text{m s}^{-1}$.

(a) Complete the equation for this decay.

$$^{.....}_{88}\text{Q} \rightarrow {}^{222}_{.....}\text{R} + {}^{4}_{2}\alpha$$

[1]

(b) By considering momentum, calculate the speed of nucleus R after the decay.

speed = ... m s^{-1} [3]

(c) State **three** quantities that are conserved during the decay.

1 .....

2 .....

3 .....

[3]

[Total: 7]

Permission to reproduce items where third-party owned material protected by copyright is included has been sought and cleared where possible. Every reasonable effort has been made by the publisher (UCLES) to trace copyright holders, but if any items requiring clearance have unwittingly been included, the publisher will be pleased to make amends at the earliest possible opportunity.

To avoid the issue of disclosure of answer-related information to candidates, all copyright acknowledgements are reproduced online in the Cambridge Assessment International Education Copyright Acknowledgements Booklet. This is produced for each series of examinations and is freely available to download at www.cambridgeinternational.org after the live examination series.

Cambridge Assessment International Education is part of Cambridge Assessment. Cambridge Assessment is the brand name of the University of Cambridge Local Examinations Syndicate (UCLES), which is a department of the University of Cambridge.

DO NOT WRITE IN THIS MARGIN
DO NOT WRITE IN THIS MARGIN
DO NOT WRITE IN THIS MARGIN
DO NOT WRITE IN THIS MARGIN
DO NOT WRITE IN THIS MARGIN